Sarasota County regulations regarding silt fences can be found in the following Sarasota County Codes:

Land Development Regulations,
Lot Drainage, Chapter 74, Art. VII

Water Pollution Control,
Chapter 54, Art. VII

Earthmoving, Chapter 54, Art. XII

Copies are available at the Resource Protection offices listed below.

For additional information contact Environmental Services:

Resource Protection
North County
1301 Cattlemen Rd., Bldg. D
Sarasota FL 34231
941.861.6113

South County
4000 S. Tamiami Trail
Room 122
Venice FL 34293
941.861.3029

Water Resources
1101 Sarasota Center Blvd.
Sarasota FL 34240
941.861.0661

Sarasota County
scgov.net

RP0105
Recycled Paper

Sarasota County

SILTFENCES

for construction sites

Silt fences are the most common form of temporary erosion and sedimentation control. Install them prior to site disturbance and keep them in place until final soil stabilization is complete.

This brochure will tell you why and how.

Sarasota County
scgov.net

Erosion and Sedimentation Principles

Erosion is the process of soil loss from upland areas. It occurs most commonly as the result of heavy rainfalls.

Sedimentation occurs when soil erodes from a filled or disturbed upland and is transported to another location by the flowing water. This "runoff" flows to ditches and swales and often is conveyed into wetlands, ponds, streams and coastal bays. When runoff slows, the suspended soil begins to settle in the process called sedimentation.

Erosion and Sedimentation Best Management Practices (BMPs)

Silt fences are one of several Best Management Practices (BMPs) for temporary erosion and sedimentation control. Their purpose is to minimize the impact of land development and construction activities on surface waters, wildlife and aquatic habitats, stormwater systems (including culverts and swales) and to protect neighboring properties.

Silt fences may not be suitable for all applications. Other forms of temporary erosion and sedimentation control devices like strawbales, berms, impoundments and other commercially available products can also be utilized for this purpose.

Silt fence material is available from construction supply houses and home centers. Although there are variations for different applications, the most common type consists of a tightly woven plastic fabric approximately 3 feet in height.

Wooden stakes are attached to the plastic fabric at regular intervals, with the bottom 8 inches of fabric remaining loose as flap or tail. When properly installed, the stakes should face the down-gradient side, while the flap should be buried in a shallow trench on the up-slope side and backfilled with the excavated soil. See proper installation of a silt fence in the drawing below.

Rolls of silt fence material are usually available in lengths of 50 and 100 feet. It is important when installing several rolls of silt fence to roll the last stake of a roll in the fabric with the first stake of the next roll in order to create a seamless transition to the next roll.

Proper Silt Fence Installation

Specifications are also labeled in Spanish to better assist our customers.

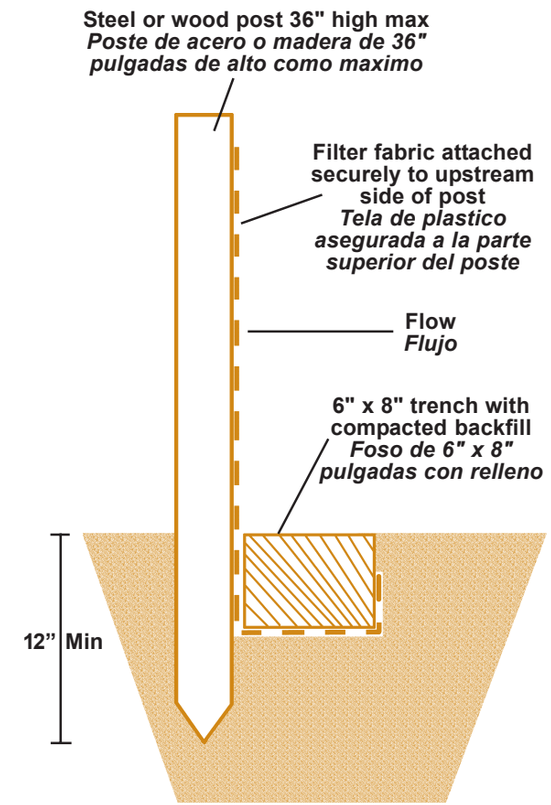

Left: This silt fence was poorly installed and not maintained. Note that several of the support stakes have failed and that the flap is not trenched in.

Below: Properly installed silt fence on a regraded slope prior to vegetation planting.

Note that improperly installed silt fences resulted in a violation at this site for altering the shoreline and filling the waterway. A Stop Work Order was posted until corrective actions were completed.

Maintenance is critical!

The maximum life of a silt fence is generally no longer than 6 months.

If construction is expected to take longer, it is wise to plan for fence replacement as necessary. Check the condition of silt fences weekly and after every rain period.

Remove accumulated sediment from the up-slope side of the fence when it reaches halfway up the face of the fence.

Consequences and Cost

Proper use and maintenance of silt fences can save money and help protect the environment:

- Statistics indicate that more than 4 million tons of sediment are carried to waterways in the United States each year as the result of land development and highway construction.
- Excessive amounts of sediment result in obstruction of storm water conveyances and stream channels, resulting in reduced hydraulic capacity and increased occurrences of flooding.
- Excessive amounts of sediment also increase the costs of personnel and equipment needed for maintenance of the storm water system.
- Fine sediments do not settle quickly. By remaining in suspension they affect sunlight penetration and alter the rate of heat exchange from a waterway. Reduced sunlight penetration has a negative impact upon aquatic vegetation such as seagrasses.
- Coarse sediments settle quickly, but they can blanket bottom areas, impacting bottom-dwelling plants and animals.
- Improperly installed and poorly maintained silt fences also add a direct project cost to construction activity, for example:
  - Fill lost from a site must be replaced.
  - Remedial and corrective actions result in lost productivity.
  - Serious or chronic failures in the installation/maintenance of silt fences may result in a Stop Work Order on the project.

Training and Certification on Erosion Control BMPs

The Florida Department of Environmental Protection administers a training and certification program for Inspectors and a separate course for Contractors (with available CEUs).

Locally, classes are offered through the Suncoast Public Works Academy at the Sarasota County Technical Institute. Please contact:

Karen Johnson, Suncoast Public Works Academy/SCTI

4748 Beneva Road
Sarasota, FL 34233-1756
941.924.1365, ext. 473

SILTFENCES